# Single Point, Trailer System

## The Highest Quality Single Point System For On-Board Weighing

The Single Point On-board system provides gross or net vehicle weight for your trailer. The Single Point load cell system provides accurate vehicle weight information for a variety of hauling applications. Designed for both OEM and retrofit installations, the system is easy to install and provides years of trouble free operation. The system is designed for use with all single point trailer suspensions utilizing a 4" trunnion shaft.

**Single Point,**
**Trailer System - 9301025**

## Key Features:

- 1% of net payload
- Easy to operate - One program
- Extensive self diagnostic
- Easy two-step calibration
- Post calibration
- Weight set-alarm points
- Supervisor lock-out
- Bright, reliable, easy to read LED display

## Options:

- Printer
- Relay board
- Hand held remote

## Applications:

- Bulk hauling
- Forestry/logging
- Aggregate
- Agriculture

**5920 South 194th Street | Kent, WA 98032 | USA**
**Sales Support: 800-638-5111 | Technical Support: 626-202-5047**
**E-mail: Obw.usa@vpgsensors.com**

sionboard.com

ON-BOARD WEIGHING
A VPG Brand

# Single Point, Tractor Only System - 9301025

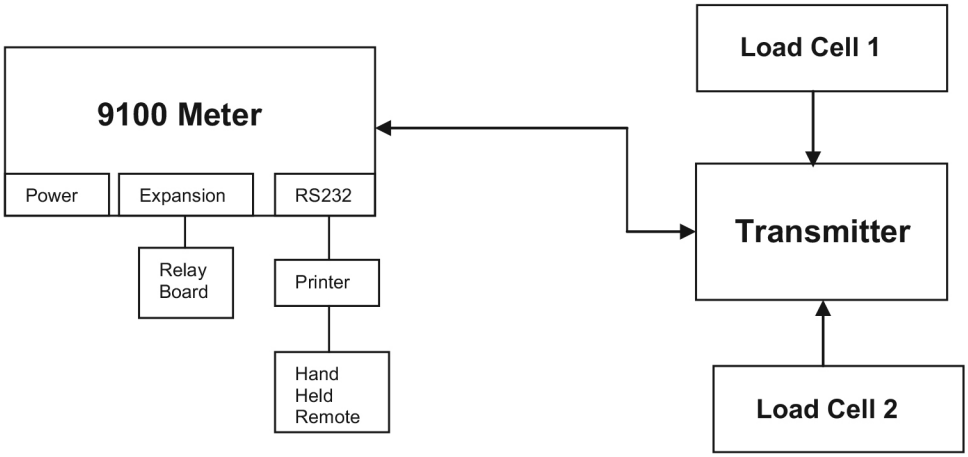


| PARAMETERS | MIN |
|---|---|
| Accuracy | 1% of net payload |
| Number of Load Cells | 2 |
| # of Channels | 1 |
| **METER** | |
| Digit Size | .45" high, 7-segment, 6-digit LED |
| Screen Type | LED |
| Size | 6.5" L X 3.2" W X 1.9" D; 1.7 lbs |
| Divisions | 50, 100 (lbs or kg) |
| Meter Operating Voltage | 11.5 to 16 Vdc @ 400mA |
| Meter Operating Temperature | 14 °F to 104 °F |
| Conversion (Frequency to digital) | 2 updates/second; approx 4,000 display counts |
| Communications | RS232 |
| Memory | 64 K byte ROM for operating system and programs |
| **TRANSMITTERS** | |
| Analog Input | 0.4 mV/V to 1.0 mV/V |
| Conversion | Voltage to Frequency, 66 kHz/mV |
| Expansion Port | |
| **LOAD CELL** | |
| Material | Alloy Steel, nickel-plated |
| Weight | 59 lbs |
| Size | 16.3" Long |
| Output | 0.5 ± 0.01 mV/V @ 14,500 lbs |
| Impedance | 350 Ω Minimum |

**DISCLAIMER:** ALL PRODUCTS, PRODUCT SPECIFICATIONS AND DATA ARE SUBJECT TO CHANGE WITHOUT NOTICE. Vishay Precision Group, Inc., its affiliates, agents, and employees, and all persons acting on its or their behalf (collectively, "VPG"), disclaim any and all liability for any errors, inaccuracies or incompleteness contained herein or in any other disclosure relating to any product. The product specifications do not expand or otherwise modify VPG's terms and conditions of purchase, including but not limited to, the warranty expressed therein. VPG makes no warranty, representation or guarantee other than as set forth in the terms and conditions of purchase. **To the maximum extent permitted by applicable law, VPG disclaims (i) any and all liability arising out of the application or use of any product, (ii) any and all liability, including without limitation special, consequential or incidental damages, and (iii) any and all implied warranties, including warranties of fitness for particular purpose, non-infringement and merchantability.** Information provided in datasheets and/or specifications may vary from actual results in different applications and performance may vary over time. Statements regarding the suitability of products for certain types of applications are based on VPG's knowledge of typical requirements that are often placed on VPG products. It is the customer's responsibility to validate that a particular product with the properties described in the product specification is suitable for use in a particular application. You should ensure you have the current version of the relevant information by contacting VPG prior to performing installation or use of the product, such as on our website at vpgsensors.com. No license, express, implied, or otherwise, to any intellectual property rights is granted by this document, or by any conduct of VPG. The products shown herein are not designed for use in life-saving or life-sustaining applications unless otherwise expressly indicated. Customers using or selling VPG products not expressly indicated for use in such applications do so entirely at their own risk and agree to fully indemnify VPG for any damages arising or resulting from such use or sale. Please contact authorized VPG personnel to obtain written terms and conditions regarding products designed for such applications. Product names and markings noted herein may be trademarks of their respective owners.